TBI TRANSFORMER BOBBIN INDUSTRIAL CO.,LTD.
Tel : 86-769-88789999 Fax : 86-769-88789989
http:// tbi-tw.com e-mail : tb6688@ms46.hinet.net

REVISIONS				
REV	SYM	DRAFTER	CHECKER	DATE
1		X.H.GU	G.F.YANG	04/01/14
2				
3				

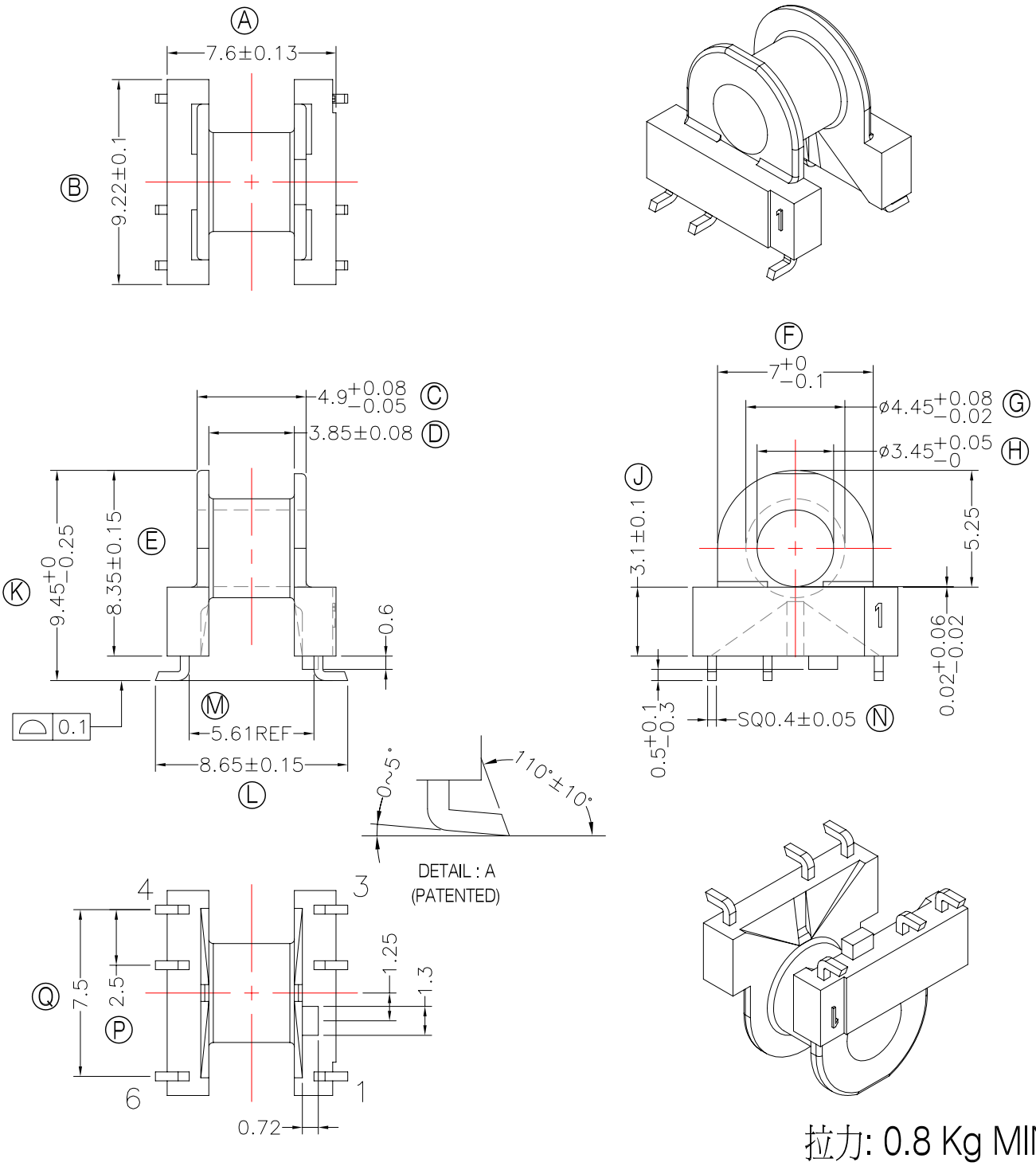

拉力: 0.8 Kg MIN

DWG NO.	EP7-6P-L-2.5V-G4-11					
PART NO.	MATERIAL (BOBBIN)	MATERIAL (TERMINAL)	TERMINAL (PLATING)	PIN ALLOCATION	NOTE	
TBI-103-08741.1103	PM-9630	PB	Sn	ALL PIN		H
	TOLERANCE: 0<L<=4:±0.1 4<L<=16:±0.2 16<L<=63:±0.3			UNIT : m / m	SCALE 1 : 1	

Finish:
1. PB wire Immersion Sn on terminal : Thickness:Sn plating,100%,5 μm (200 μ inches) min,Base nickel 0.625 μm (25 μ inches) min.
2. CP wire Immersion Sn on terminal : Thickness:Sn plating,100%,5 μm (200 μ inches) min.
3. Coplanarity deviation: 0.10 mm (0.004 inches)max.

REV 1