TBI TRANSFORMER BOBBIN INDUSTRIAL CO.,LTD.
Tel : 86-769-88789999 Fax : 86-769-88789989
http:// tbi-tw.com e-mail : tb6688@ms46.hinet.net

REVISIONS				
REV	SYM	DRAFTER	CHECKER	DATE
1		G.F.YANG	W.H.HSU	08/03/15
2				
3				

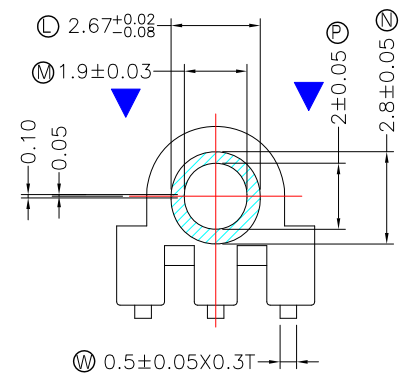

SECTION A-A

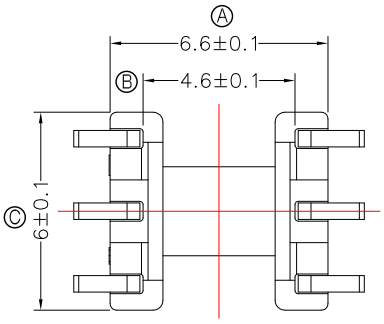

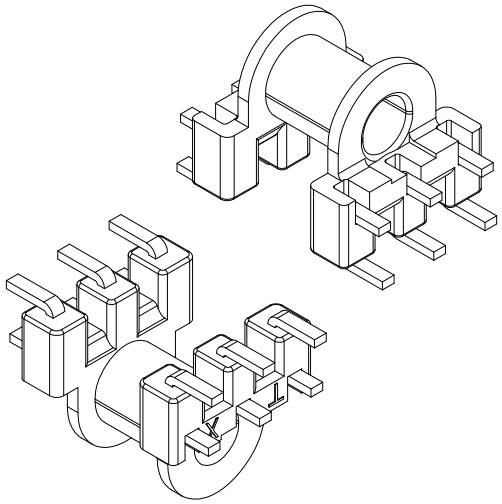

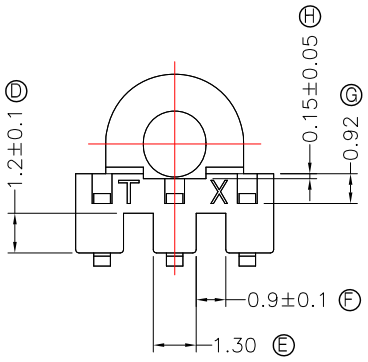

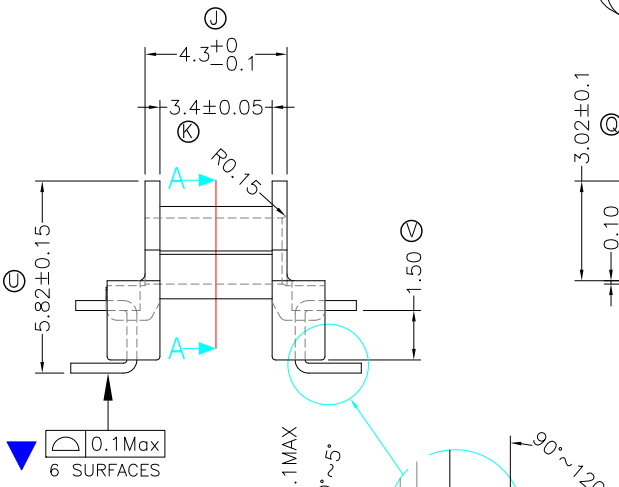

SCALE 10 : 1

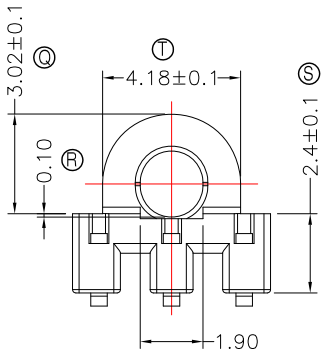

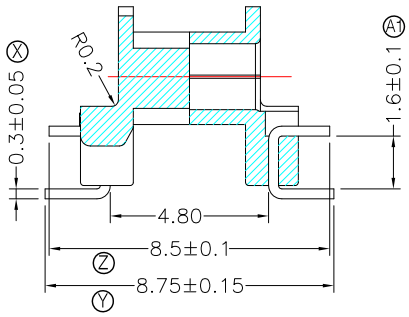

SECTION B-B

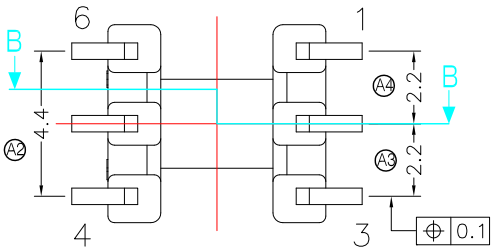

NOTE:
1.推力,拉力0.7KGMIN 平均推,拉力為0.95KG.
2.PIN平面度要求0.1max;
3.毛邊0.1Max, 繞線區毛邊0.05Max.
4.繞線管錯位0.05Max,但不能有利角.
5.不能有台階0.1Max(合模錯位處,繞線管除外).

▼ 標示為特殊特性中的重要特性;

PART NO.	EP6-6P-J-2.2-D7-11				
DWG NO.	MATERIAL (BOBBIN)	MATERIAL (TERMINAL)	TERMINAL (PLATING)	PIN ALLOCATION	NOTE
TBI-103-07471.1103	PM-9630JT	P.B	Sn	ALL PIN	
TBI-103-07471.1113	PM-9630JT	P.B	Sn	CUT PIN#5	
	TOLERANCE : ±0.1			UNIT : m / m	SCALE 1 : 1

Finish: 1. PB wire Immersion Sn on terminal : Thickness:Sn plating,100%,5 μ m (200 μ inches) min,Base nickel 1-2.5 μ m (40-100 μ inches) min.
2. CP wire Immersion Sn on terminal : Thickness:Sn plating,100%,5 μ m (200 μ inches) min.
3. Coplanarity deviation: 0.10 mm (0.004 inches)max.

REV 1