TBI TRANSFORMER BOBBIN INDUSTRIAL CO.,LTD.
Tel : 86-769-88789999 Fax : 86-769-88789989
http:// tbi-tw.com e-mail : tb6688@ms46.hinet.net

REVISIONS				
REV	SYM	DRAFTER	CHECKER	DATE
1		X.H.GU	G.F.YANG	05/26/15
2		X.H.GU	G.F.YANG	06/18/15
3				

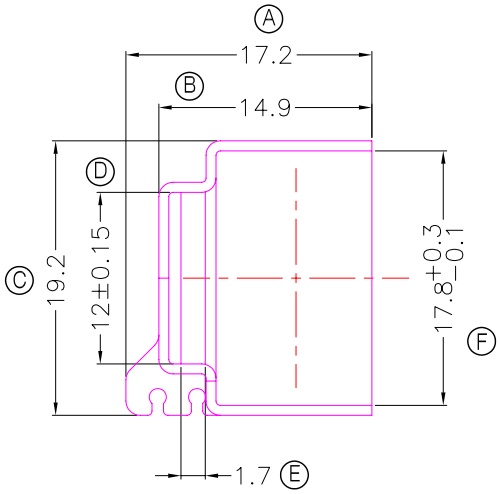

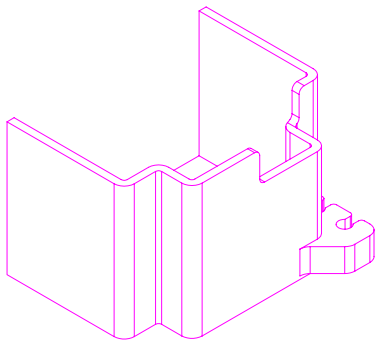

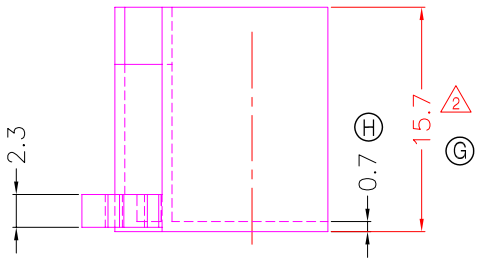

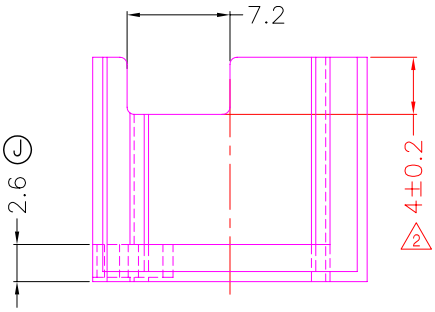

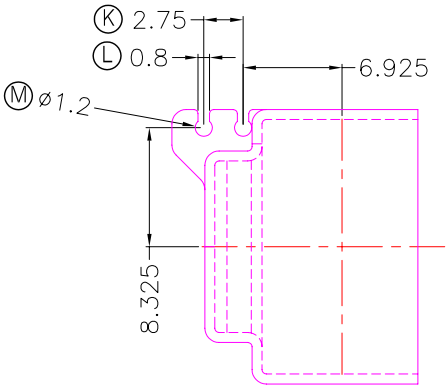

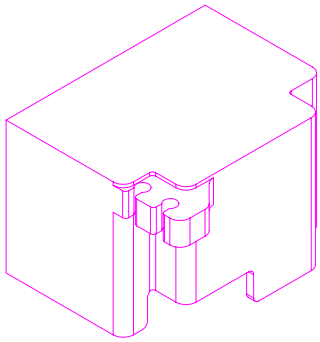

NOTE:

1.耐壓4.0Kv /1.5mA 60S;

2.任意一點強度須1.5kg MIN;

與TBI-238-26211.11XX(ATQ17-15A-5P-TH-B1-11)配套使用;

DWG NO.	ATQ17-15A-CASE-B1-11					
PART NO.	MATERIAL (BOBBIN)	MATERIAL (TERMINAL)	TERMINAL (PLATING)	PIN ALLOCATION	NOTE	
TBI-238-26211.11C	PM-9630	NA				S
						H

TOLERANCE:0<L<=4:±0.1 4<L<=16:±0.2 16<L<=63:±0.3 | UNIT : m / m | SCALE 1 : 1

Finish:
1. PB wire Immersion Sn on terminal : Thickness:Sn plating,100%,5 μm (200 μ inches) min,Base nickel 0.625 μm (25 μ inches) min.
2. CP wire Immersion Sn on terminal : Thickness:Sn plating,100%,5 μm (200 μ inches) min.
3. Coplanarity deviation: 0.10 mm (0.004 inches)max.

REV 2