TBI TRANSFORMER BOBBIN INDUSTRIAL CO.,LTD.
Tel : 86-769-88789999 Fax : 86-769-88789989
http:// tbi-tw.com e-mail : tb6688@ms46.hinet.net

REVISIONS

REV	SYM	DRAFTER	CHECKER	DATE
1		T.S.LII	W.H.HSU	06/01/01
2		T.S.LII	W.H.HSU	09/30/03
3		T.S.LII	W.H.HSU	07/24/06

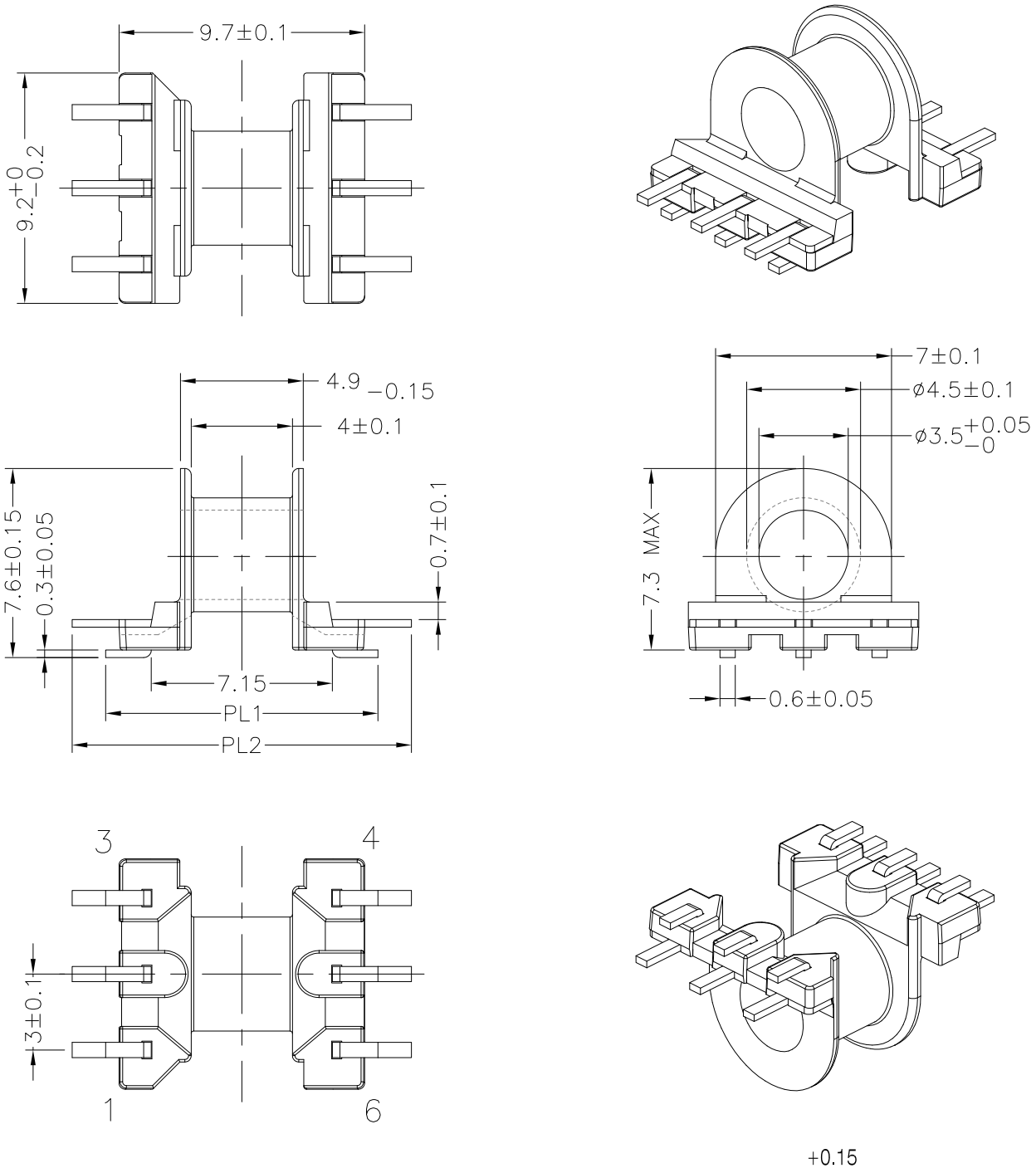

DWG NO.	EP7-6P-J-3.0-H-1					
PART NO.	MATERIAL (BOBBIN)	MATERIAL (TERMINAL)	TERMINAL (PLATING)	PIN ALLOCATION		
TBI-103-08081.103	PM-9630	PB	Sn	ALL PIN	PL1=10.75±0.2	PL2=13.4±0.2
TBI-103-08081.113	PM-9630	PB	Sn	ALL PIN	PL1=10.75 +0.15 -0.30	PL2=13.4±0.2

TOLERANCE: .X±0.15 .XX±0.10 .XXX±0.05 | UNIT : m / m | SCALE 4 : 1

Finish: 1. Immersion gold on terminal : Thickness gold 0.075 μm (3 μ inches) min,Base nickel 0.625 μm (25 μ inches) min.
2. Immersion Sn on terminal : Terminal:Sn plating,100, 5 μm (200 μ inches) min , Base nickel 0.625 μm (25 μ inches) min.
3. Coplanarity deviation: 0.10 mm (0.004 inches)max.

REV 3