TBI TRANSFORMER BOBBIN INDUSTRIAL CO.,LTD.
Tel : 86-769-88789999 Fax : 86-769-88789989
http:// tbi-tw.com e-mail : tb6688@ms46.hinet.net

REVISIONS				
REV	SYM	DRAFTER	CHECKER	DATE
1		G.F.YANG	W.H.HSU	02/04/21
2				
3				

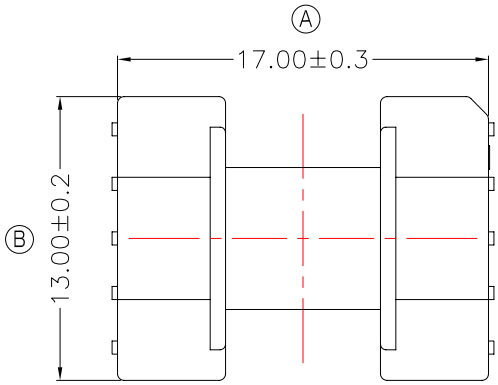

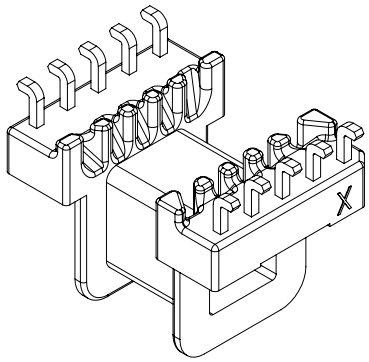

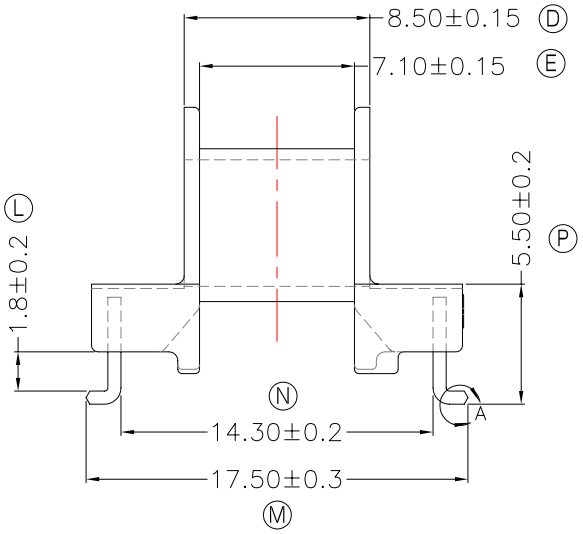

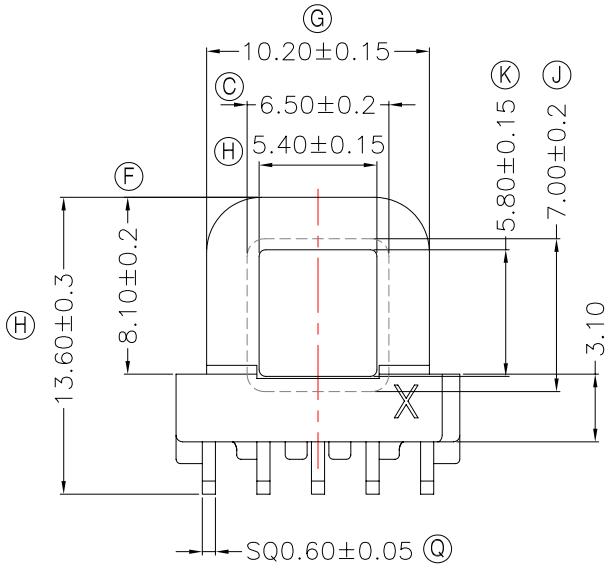

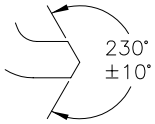

DETAIL:A
PATENTED

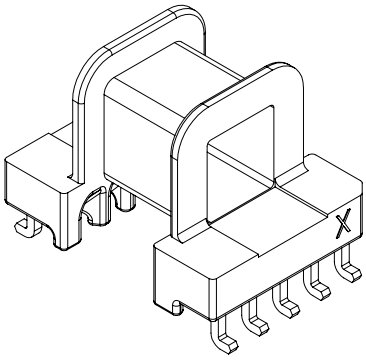

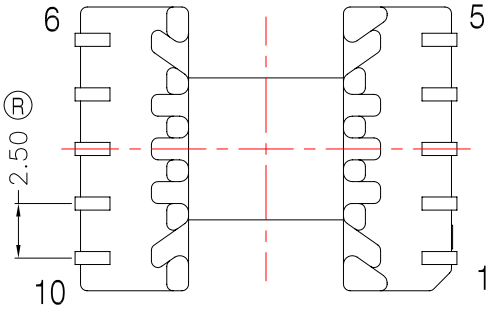

PIN拉力1.0KGMIN; PIN平面度0.1MAX

DWG NO.	EP13-10P-L-2.5-J9-11					
PART NO.	MATERIAL (BOBBIN)	MATERIAL (TERMINAL)	TERMINAL (PLATING)	PIN ALLOCATION	NOTE	
TBI-103-03991.1106	PM-9630	CP WIRE	Sn	ALL PIN		H.C
	TOLERANCE:0<L<4:±0.1 4<L<16:±0.2 16<L<63:±0.3			UNIT : m / m	SCALE 1 : 1	

Finish:
1. PB wire Immersion Sn on terminal : Thickness:Sn plating,100%,5 μm (200 μ inches) min,Base nickel 0.625 μm (25 μ inches) min.
2. CP wire Immersion Sn on terminal : Thickness:Sn plating,100%,5 μm (200 μ inches) min.
3. Coplanarity deviation: 0.10 mm (0.004 inches)max.

REV 1