TBI TRANSFORMER BOBBIN INDUSTRIAL CO.,LTD.
Tel : 86-769-88789999 Fax : 86-769-88789989
http:// tbi-tw.com e-mail : tb6688@ms46.hinet.net

REVISIONS				
REV	SYM	DRAFTER	CHECKER	DATE
1		X.H.GU	G.F.YANG	04/04/19
2				
3				

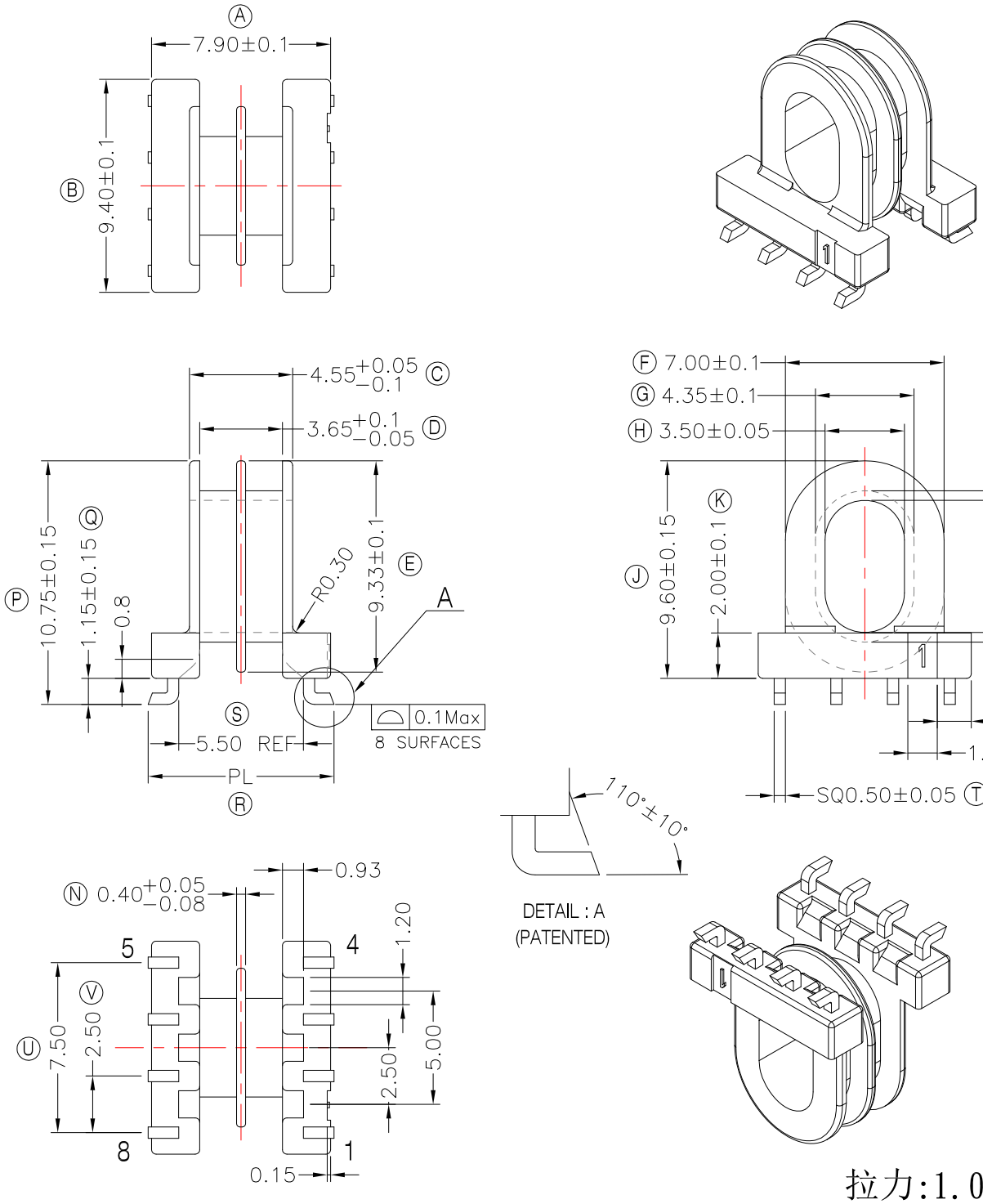

拉力:1.0KG MIN

DWG NO.	EPX7-8P-L-2.5-J2-11-2S					
PART NO.	MATERIAL (BOBBIN)	MATERIAL (TERMINAL)	TERMINAL (PLATING)	PIN ALLOCATION	NOTE	
TBI-103-08922.1103	PM-9630	PB	Sn	ALL PIN PL=8.2±0.15		H.C
TBI-103-08922.1113	PM-9630	PB	Sn	CUT PIN#2,3,6,7 PL=8.2±0.15		
TBI-103-08922.1123	PM-9630	PB	Sn	CUT PIN#2,3,6,7 PL=8.9±0.15	成品後需加鍍	

TOLERANCE: .X±0.15 .XX±0.10 .XXX±0.05 | UNIT : m/m | SCALE 1:1

Finish:
1. PB wire Immersion Sn on terminal : Thickness:Sn plating,100%,5μm (200μinches) min,Base nickel 0.625μm (25μ inches) min.
2. CP wire Immersion Sn on terminal : Thickness:Sn plating,100%,5μm (200μinches) min.
3. Coplanarity deviation: 0.10 mm (0.004 inches)max.

REV 1