TBI TRANSFORMER BOBBIN INDUSTRIAL CO.,LTD.
Tel : 86-769-88789999 Fax : 86-769-88789989
http:// tbi-tw.com e-mail : tb6688@ms46.hinet.net

REVISIONS				
REV	SYM	DRAFTER	CHECKER	DATE
1		X.H.GU	G.F.YANG	11/18/15
2				
3				

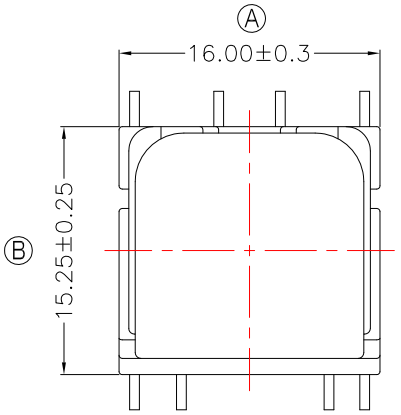

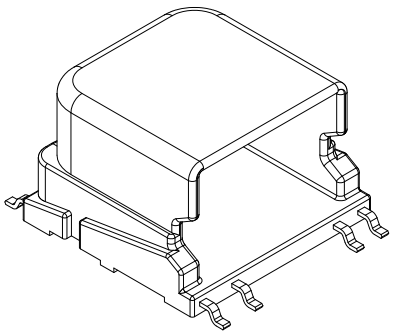

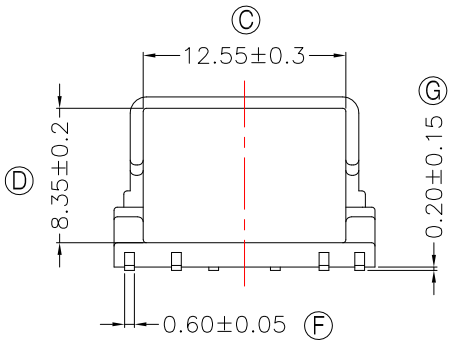

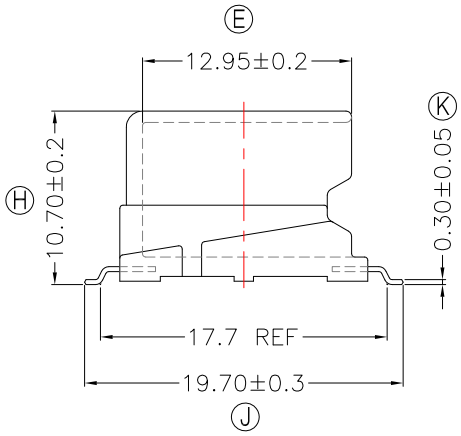

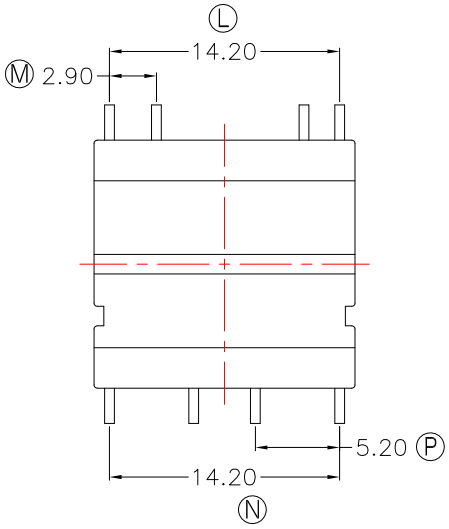

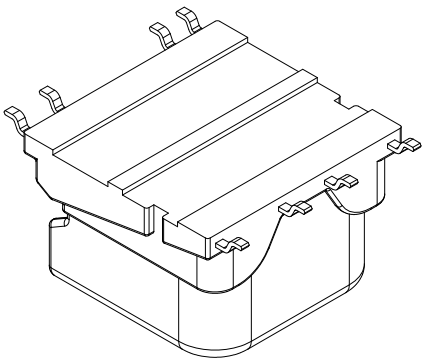

拉力要求: 1.0 Kg Min.

DWG NO.	B2016-8P-GW-3E-11				
PART NO.	MATERIAL (BOBBIN)	MATERIAL (TERMINAL)	TERMINAL (PLATING)	PIN ALLOCATION	NOTE
TBI-120-09351.1103	PM-9630	PB	Sn	ALL PIN	

	TOLERANCE:0<L<=4:±0.1 4<L<=16:±0.2 16<L<=63:±0.3	UNIT : m / m	SCALE 1 : 1

Finish:
1. PB wire Immersion Sn on terminal : Thickness:Sn plating,100%,5 μ m (200 μ inches) min,Base nickel 0.625 μ m (25 μ inches) min.
2. CP wire Immersion Sn on terminal : Thickness:Sn plating,100%,5 μ m (200 μ inches) min.
3. Coplanarity deviation: 0.10 mm (0.004 inches)max.

REV 1