TBI TRANSFORMER BOBBIN INDUSTRIAL CO.,LTD.
Tel : 86-769-88789999 Fax : 86-769-88789989
http:// tbi-tw.com e-mail : tb6688@ms46.hinet.net

REVISIONS				
REV	SYM	DRAFTER	CHECKER	DATE
1		S.Y.TANG	W.H.HSU	08/23/07
2				
3				

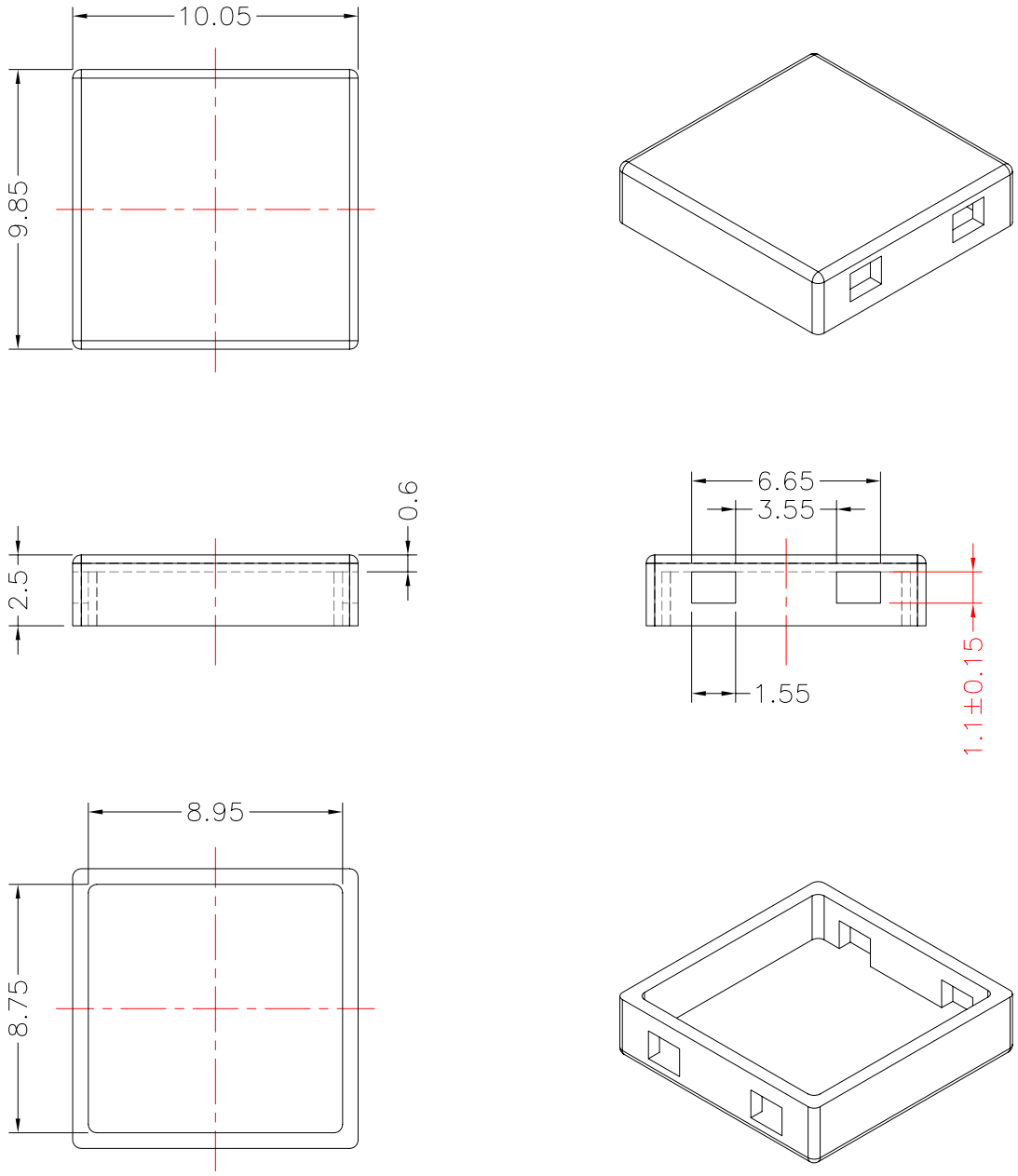

汽車用產品

DWG NO.	EE12.6-10P-CASE-A-3				
PART NO.	MATERIAL (BOBBIN)	MATERIAL (TERMINAL)	TERMINAL (PLATING)	PIN ALLOCATION	NOTE
TBI-101-13011.3C	LCP-E4008 BK				

TOLERANCE: .X±0.15 .XX±0.10 .XXX±0.05 UNIT : m / m SCALE 4 : 1

Finish:
1. Pb wire Immersion Sn on terminal : Thickness:Sn plating,100,5 μm (200 μ inches) min,Base nickel 0.625 μm (25 μ inches) min.
2. CP wire Immersion Sn on terminal : Thickness:Sn plating,100,5 μm (200 μ inches) min.
3. Coplanarity deviation: 0.10 mm (0.004 inches)max.

REV 1