TBI TRANSFORMER BOBBIN INDUSTRIAL CO.,LTD.
Tel : 86-769-88789999 Fax : 86-769-88789989
http:// tbi-tw.com e-mail : tb6688@ms46.hinet.net

REVISIONS

REV	SYM	DRAFTER	CHECKER	DATE
1		K.F.YANG	S.M.SHIH	11/11/06
2		K.F.YANG	S.M.SHIH	03/12/07
3				

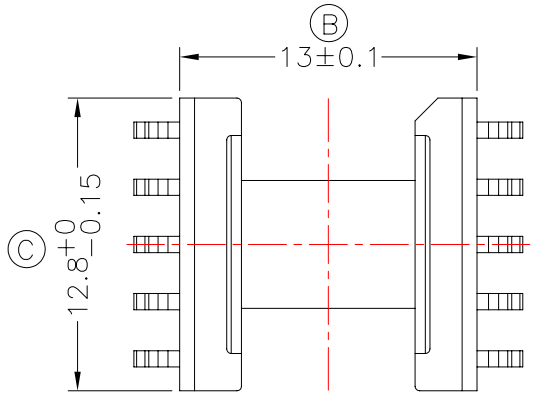

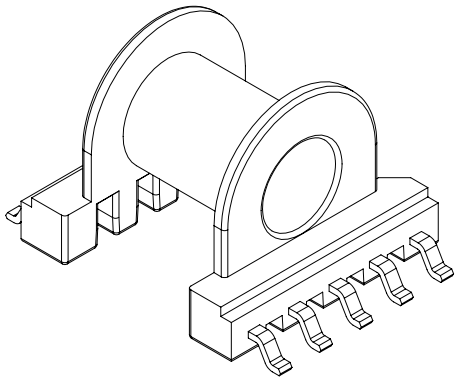

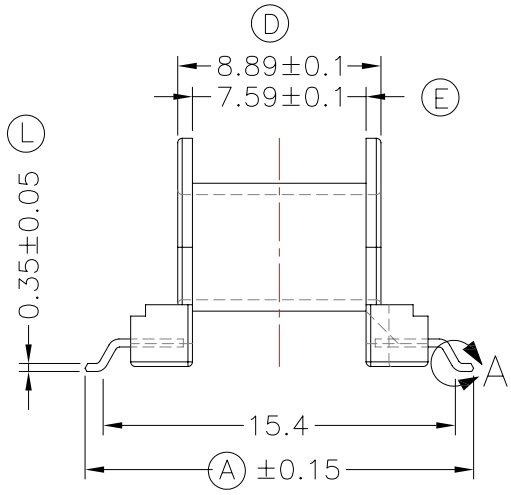

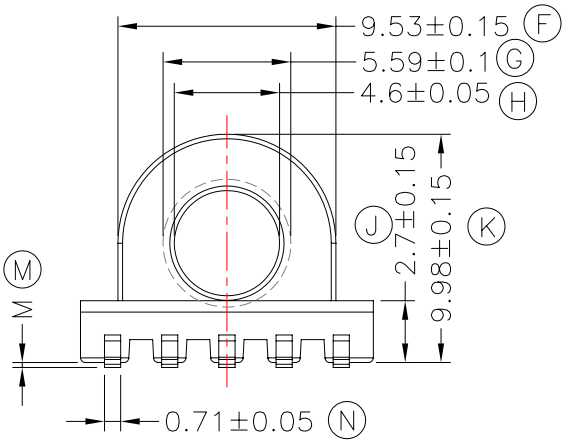

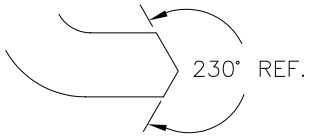

DETAIL:A
PATENTED

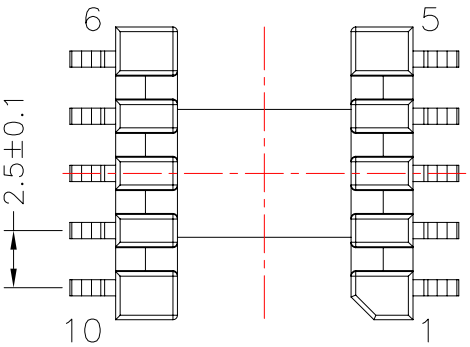

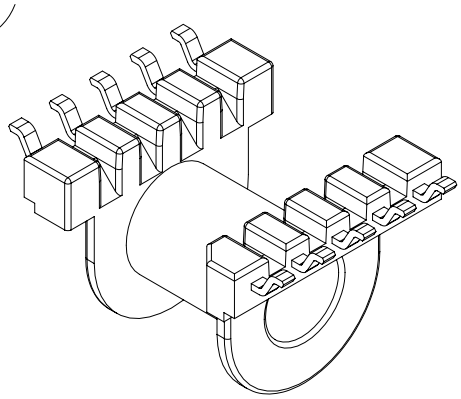

拉力: 1.0kg Min

DWG NO.	EP13-10P-GW-2.5-2G-1				
PART NO.	MATERIAL (BOBBIN)	MATERIAL (TERMINAL)	TERMINAL (PLATING)	PIN ALOCATION	NOTE
TBI-103-03271.103	PM-9630	PB (C5191)	Sn	ALL PIN Ⓐ = 16.99±0.15 Ⓜ=0.22±0.15	
TBI-103-03271.113	PM-9630	PB (C5191)	Sn	NO PIN # 3 Ⓐ = 16.99±0.15 Ⓜ=0.22±0.15	
TBI-103-03271.123	PM-9630	PB (C5191)	Sn	ALL PIN Ⓐ = 18.8±0.15 Ⓜ=0.22±0.15	
TBI-103-03271.133	PM-9630	PB (C5191)	Sn	ALL PIN Ⓐ = 16.99±0.15 Ⓜ =0.45±0.15	
	TOLERANCE: .X±0.15 .XX±0.10 .XXX±0.05			UNIT : m / m	SCALE 3: 1

Finish:
1. PB wire Immersion Sn on terminal : Thickness:Sn plating,100,5 μm (200 μ inches) min,Base nickel 0.625 μm (25 μ inches) min.
2. CP wire Immersion Sn on terminal : Thickness:Sn plating,100,5 μm (200 μ inches) min.
3. Coplanarity deviation: 0.10 mm (0.004 inches)max.

REV 2