TBI TRANSFORMER BOBBIN INDUSTRIAL CO.,LTD.
Tel : 86-769-88789999 Fax : 86-769-88789989
http:// tbi-tw.com e-mail : tb6688@ms46.hinet.net

REVISIONS				
REV	SYM	DRAFTER	CHECKER	DATE
1		X.H.GU	G.F.YANG	02/11/17
2		X.H.GU	G.F.YANG	01/04/19
3				

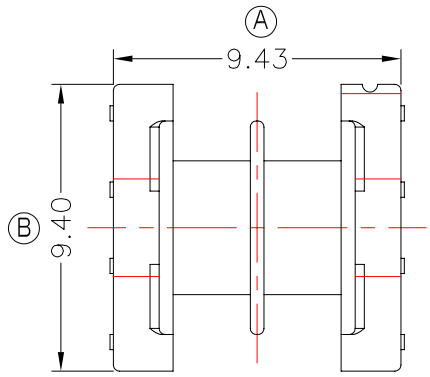

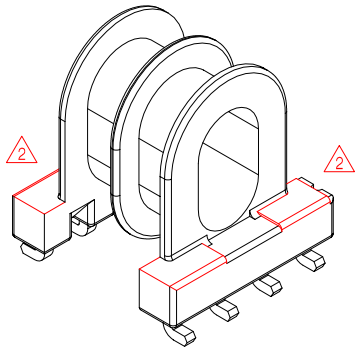

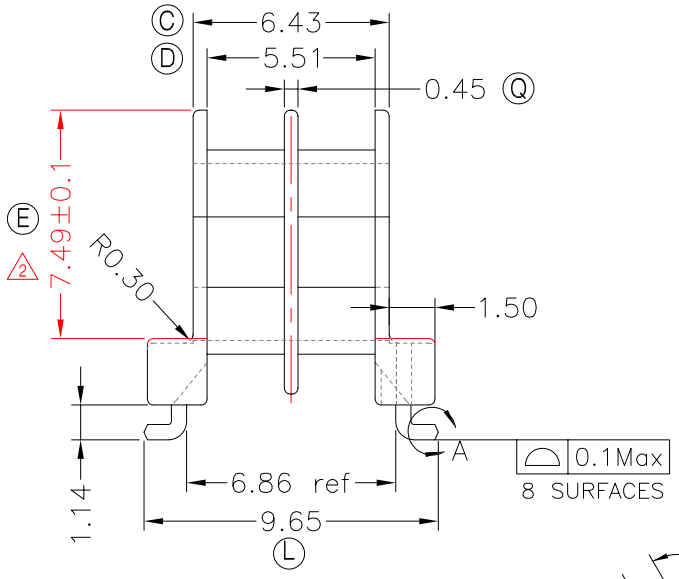

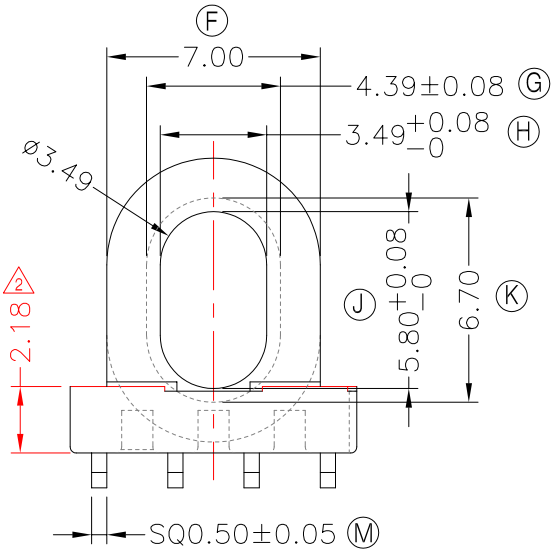

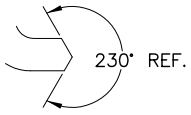

DETAIL:A
PATENTED

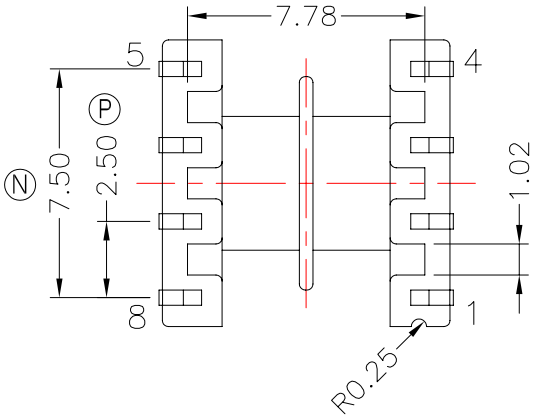

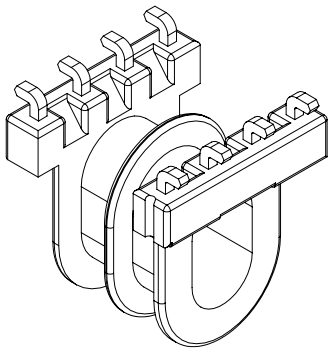

拉力:0.8KG MIN

DWG NO.	EPX9-8P-L-2.5-A3-11-2S				
PART NO.	MATERIAL (BOBBIN)	MATERIAL (TERMINAL)	TERMINAL (PLATING)	PIN ALLOCATION	NOTE
TBI-103-04132.1103	PM-9630	P.B	Sn	ALL PIN	
					H

TOLERANCE: 0<L<4 = ±0.1 4<L<16 = ±0.2 16<L<63 = ±0.3 Angles = ±1°

UNIT : m / m

SCALE 1 : 1

Finish:
1. PB wire Immersion Sn on terminal : Thickness:Sn plating,100%,5 μm (200 μ inches) min,Base nickel 0.625 μm (25 μ inches) min.
2. CP wire Immersion Sn on terminal : Thickness:Sn plating,100%,5 μm (200 μ inches) min.
3. Coplanarity deviation: 0.10 mm (0.004 inches)max.

REV 2