TBI TRANSFORMER BOBBIN INDUSTRIAL CO.,LTD.
Tel : 86-769-88789999 Fax : 86-769-88789989
http:// tbi-tw.com e-mail : tb6688@ms46.hinet.net

REVISIONS				
REV	SYM	DRAFTER	CHECKER	DATE
1		X.H.GU	G.F.YANG	12/25/20
2				
3				

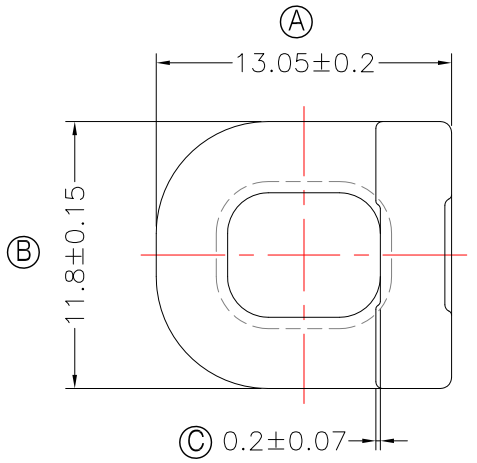

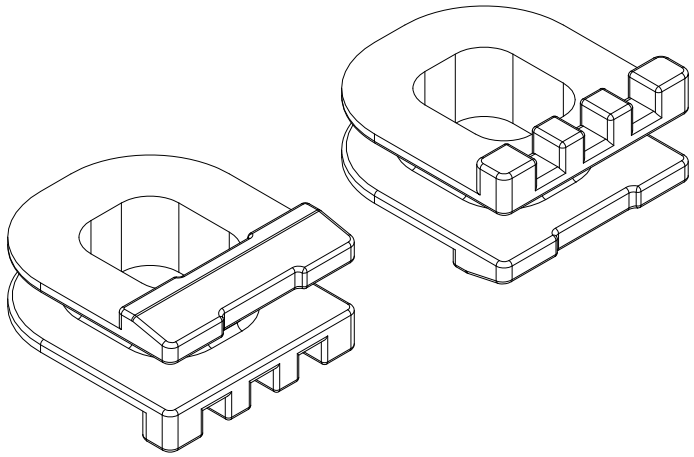

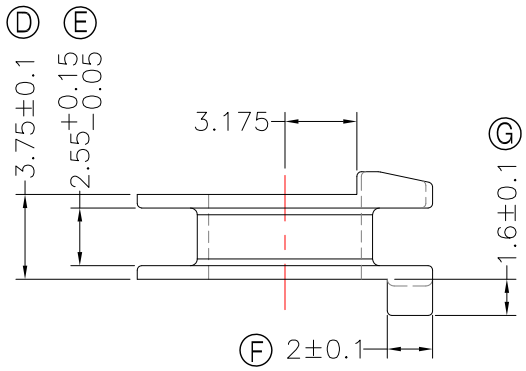

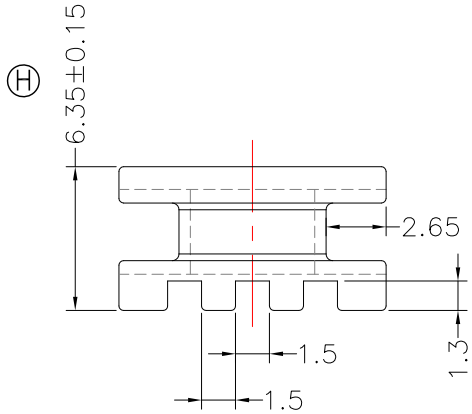

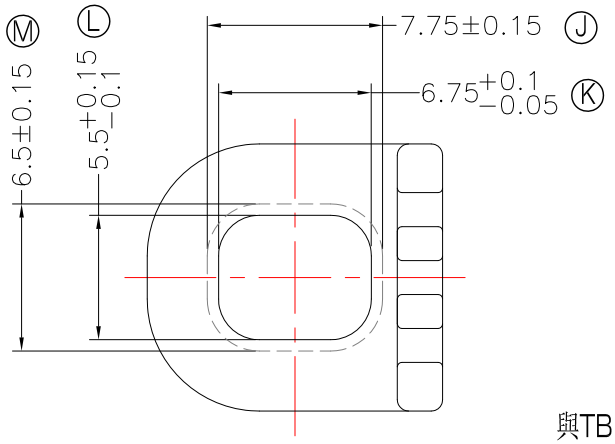

NOTE:

1.耐壓4.0Kv /1.5mA 60S;

2.任一點的強度為1.5kg MIN;

3.WINDING SPACE:2.55mm*2.65mm=6.758mm²

與TBI-238-27261.11XX(ATP15-07-6P-CASE-B6-11)配套使用;

DWG NO.	ATP15-07-NA-B6-11					
PART NO.	MATERIAL (BOBBIN)	MATERIAL (TERMINAL)	TERMINAL (PLATING)	PIN ALLOCATION	NOTE	
TBI-238-27261.11	PM-9630	NA				S
						H

	TOLERANCE: 0<L<=4:±0.1 4<L<=16:±0.2 16<L<=63:±0.3	UNIT : m / m	SCALE 1 : 1

Finish: 1. PB wire Immersion Sn on terminal : Thickness:Sn plating,100%,5μm (200μinches) min,Base nickel 0.625μm (25μ inches) min.
2. CP wire Immersion Sn on terminal : Thickness:Sn plating,100%,5μm (200μinches) min.
3. Coplanarity deviation: 0.10 mm (0.004 inches)max.

REV 1