TBI TRANSFORMER BOBBIN INDUSTRIAL CO.,LTD.
Tel : 86-769-88789999 Fax : 86-769-88789989
http:// tbi-tw.com e-mail : tb6688@ms46.hinet.net

REVISIONS				
REV	SYM	DRAFTER	CHECKER	DATE
1		X.X.YUAN	G.F.YANG	09/17/14
2				
3				

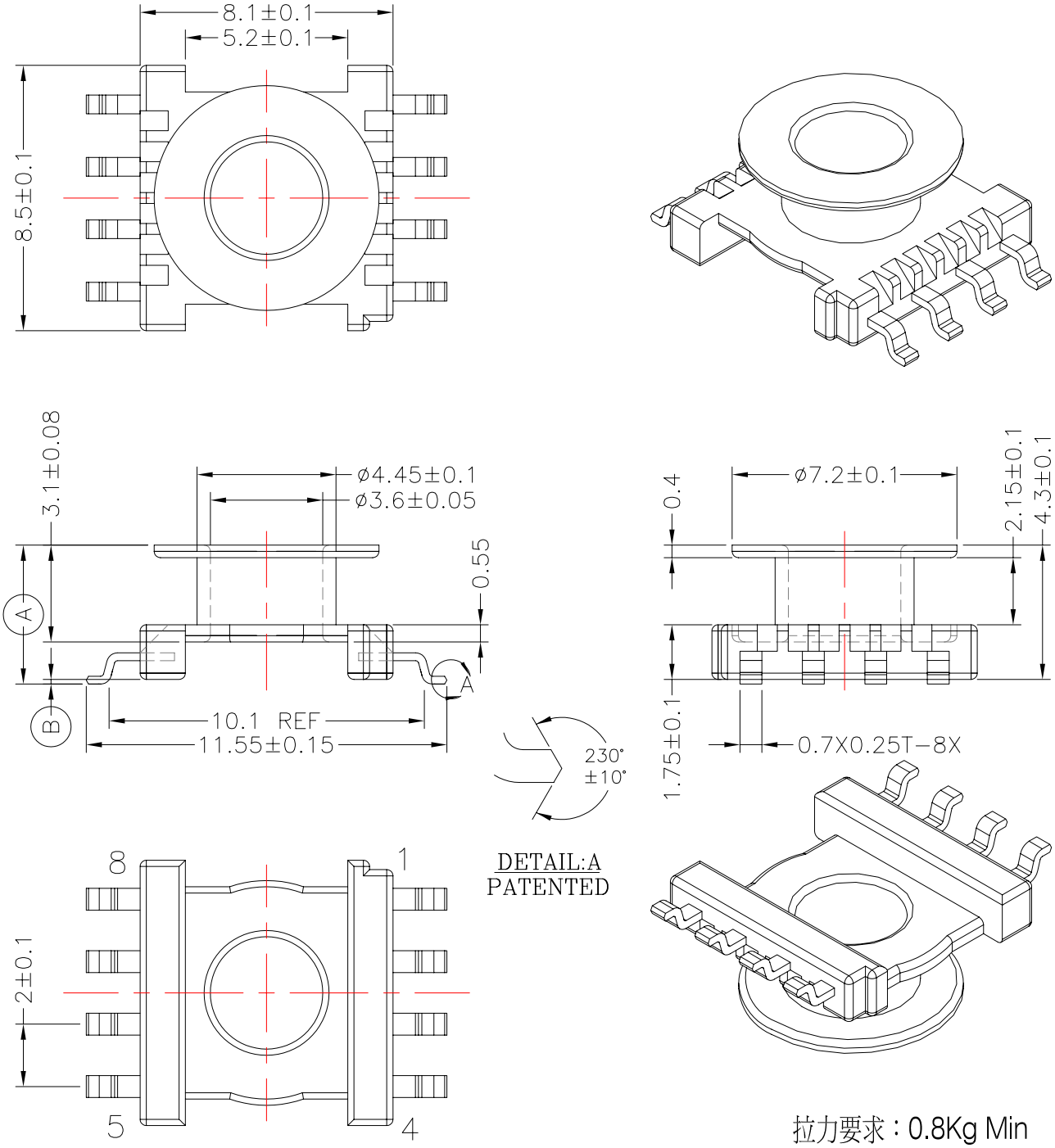

拉力要求：0.8Kg Min
平均拉力：1.0Kg Min

DWG NO.	ER9.5-8P-GW-2.0-A0-11				
PART NO.	MATERIAL (BOBBIN)	MATERIAL (TERMINAL)	TERMINAL (PLATING)	PIN ALLOCATION	NOTE
TBI-104-03101.1103	PM-9630JT	P.B	Sn	ALL PIN Ⓐ=4.45±0.15 Ⓑ=0.15±0.1	B 尺寸請管控在0.09~0.25.
TBI-104-03101.1113	PM-9630JT	P.B	Sn	CUT PIN # 2,3,6,7 Ⓐ=4.45±0.15 Ⓑ=0.15±0.1	B 尺寸請管控在0.09~0.25.
TBI-104-03101.1123	PM-9630JT	P.B	Sn	CUT PIN # 2,3,6,7 Ⓐ=4.5±0.15 Ⓑ=0.2 min	
TBI-104-03101.1133	PM-9630JT	P.B	Sn	ALL PIN Ⓐ=4.65±0.15 Ⓑ=0.35±0.15	

TOLERANCE: .X±0.15 .XX±0.10 .XXX±0.05 | UNIT : m / m | SCALE 5 : 1

Finish:
1. Pb wire Immersion Sn on terminal : Thickness:Sn plating,100,5 μm (200 μ inches) min,Base nickel 0.625 μm (25 μ inches) min.
2. CP wire Immersion Sn on terminal : Thickness:Sn plating,100,5 μm (200 μ inches) min.
3. Coplanarity deviation: 0.10 mm (0.004 inches)max.

REV 1