TBI TRANSFORMER BOBBIN INDUSTRIAL CO.,LTD.
Tel : 86-769-88789999 Fax : 86-769-88789989
http:// tbi-tw.com e-mail : tb6688@ms46.hinet.net

REVISIONS				
REV	SYM	DRAFTER	CHECKER	DATE
1		X.H.GU	G.F.YANG	11/17/11
2				
3				

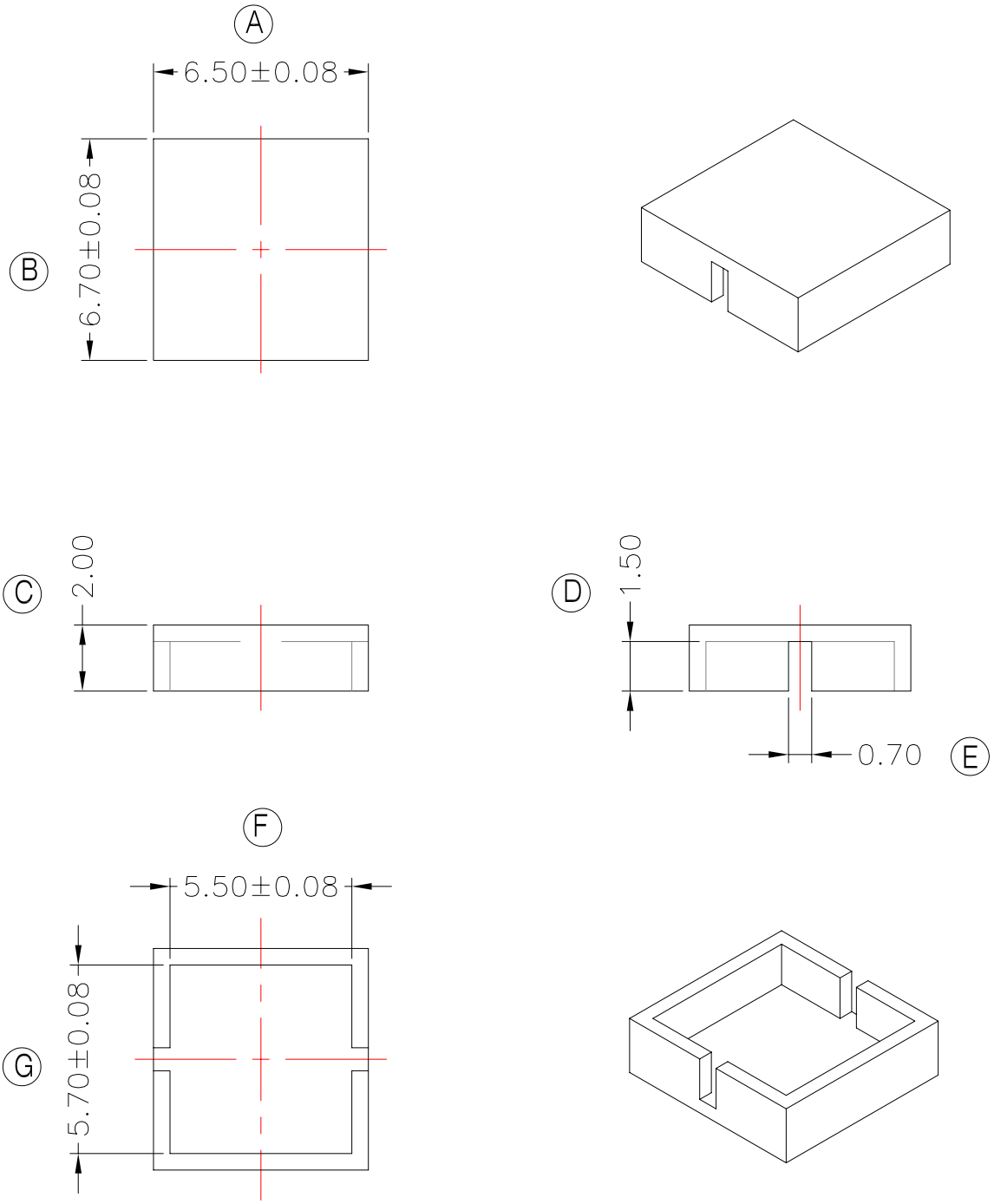

DWG NO.	EE8.0-6P-CASE-2A-31-2S					
PART NO.	MATERIAL (BOBBIN)	MATERIAL (TERMINAL)	TERMINAL (PLATING)	PIN ALLOCATION	NOTE	
TBI-101-03212.31C	LCP-E4008(BK)	NA	NA	NA		S.C
						H.C

TOLERANCE: .X±0.05 | UNIT : m / m | SCALE 1 : 1

Finish: 1. PB wire Immersion Sn on terminal : Thickness:Sn plating,100,5-12.5 μm (200-500 μinches) min,Base nickel 1.25-2.5 μm (50-100 μ inches) min.
2. CP wire Immersion Sn on terminal : Thickness:Sn plating,100,5-12.5 μm (200-500 μinches) min.
3. Coplanarity deviation: 0.10 mm (0.004 inches)max.

REV 1