TBI TRANSFORMER BOBBIN INDUSTRIAL CO.,LTD.
Tel : 86-769-88789999 Fax : 86-769-88789989
http:// tbi-tw.com e-mail : tb6688@ms46.hinet.net

REVISIONS				
REV	SYM	DRAFTER	CHECKER	DATE
1		H.X.DUAN	G.F.YANG	10/27/11
2		G.F.YANG	W.H.HSU	05/20/23
3				

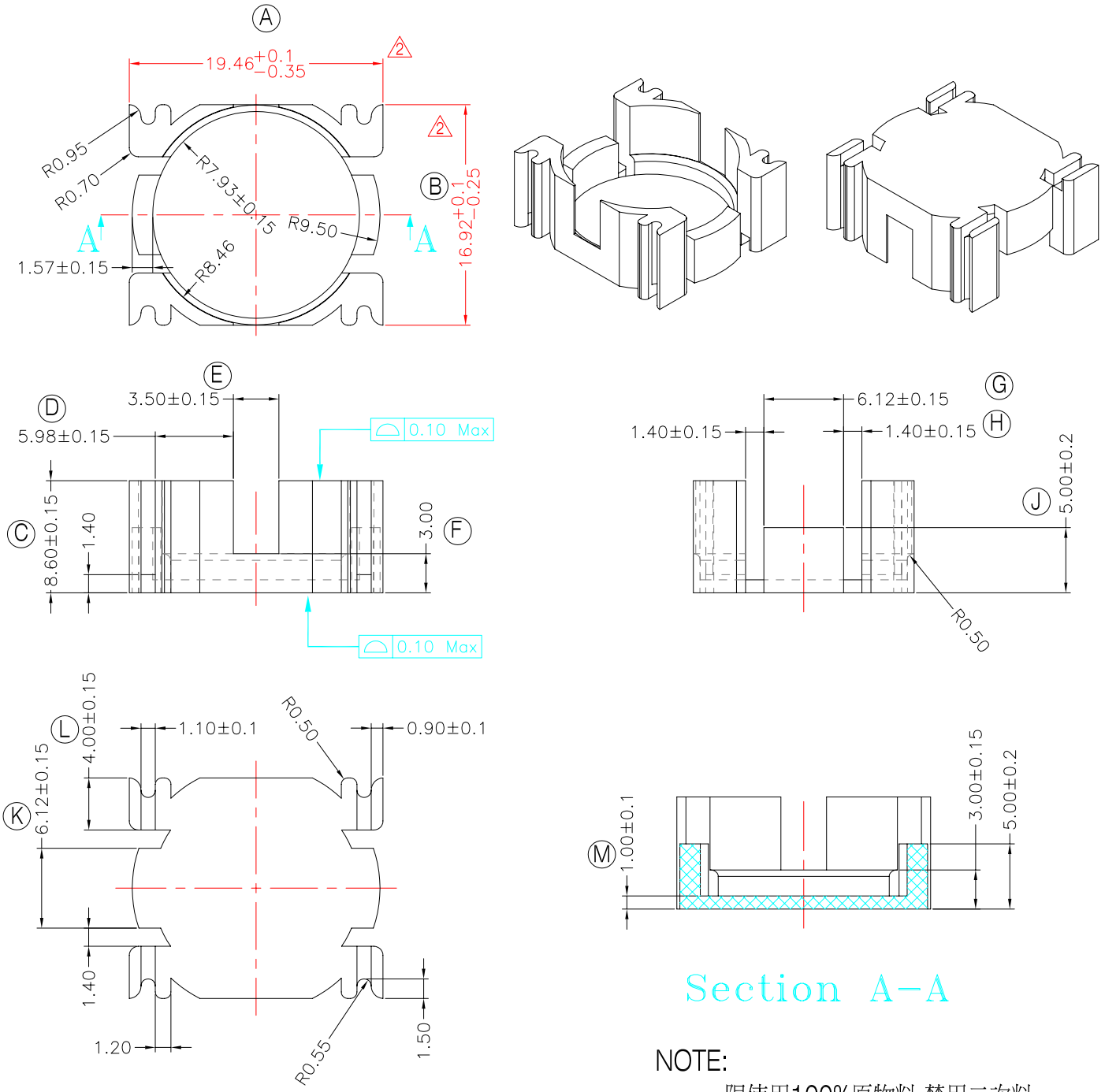

NOTE:

限使用100%原物料,禁用二次料.
材質:PPS R7

DWG NO.	TR534-CASE-D-56					
PART NO.	MATERIAL (BOBBIN)	MATERIAL (TERMINAL)	TERMINAL (PLATING)	PIN ALLOCATION	NOTE	
TBI-119-21041.56	PPS R7(BK)	NA	NA	NA		
						H.C

TOLERANCE: 0<L<=4: ±0.05 4<L<=16: ±0.07 16<L<=63: ±0.1 | UNIT : m / m | SCALE 1 : 1

Finish:
1. PB wire Immersion Sn on terminal : Thickness:Sn plating,100,5-12 μm (200-480 μ inches) min,Base nickel 1.25-2.5 μm (50-100 μ inches) min.
2. CP wire Immersion Sn on terminal : Thickness:Sn plating,100,5-12 μm (200-480 μ inches) min.
3. Coplanarity deviation: 0.10 mm (0.004 inches)max.

REV 2