TBI TRANSFORMER BOBBIN INDUSTRIAL CO.,LTD.
Tel : 86-769-88789999 Fax : 86-769-88789989
http:// tbi-tw.com e-mail : tb6688@ms46.hinet.net

REVISIONS				
REV	SYM	DRAFTER	CHECKER	DATE
1		K.F.YANG	W.H.HSU	06/16/06
2		S.Y.TANG	W.H.HSU	09/25/07
3				

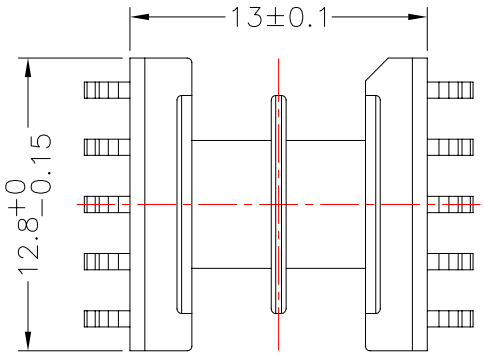

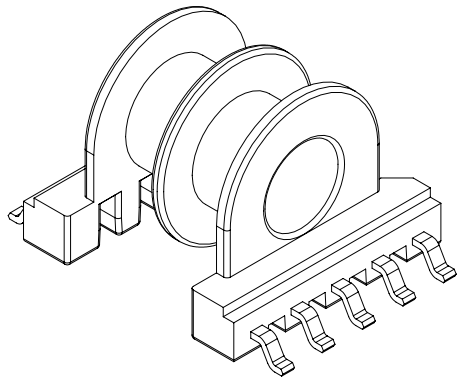

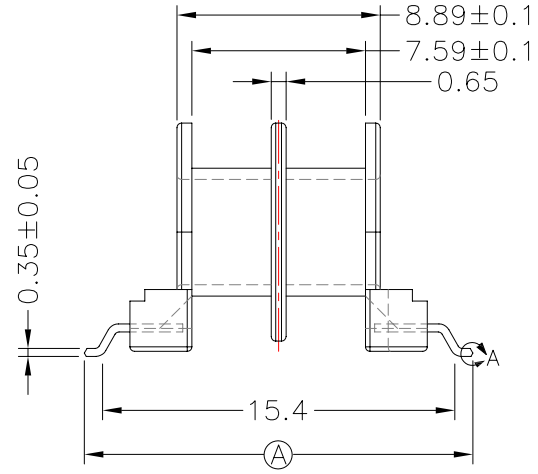

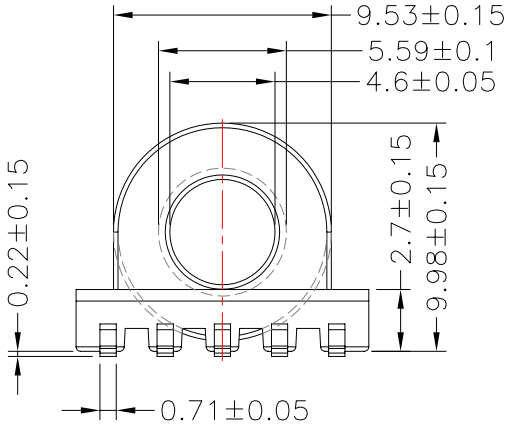

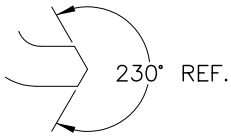

DETAIL:A
PATENTED

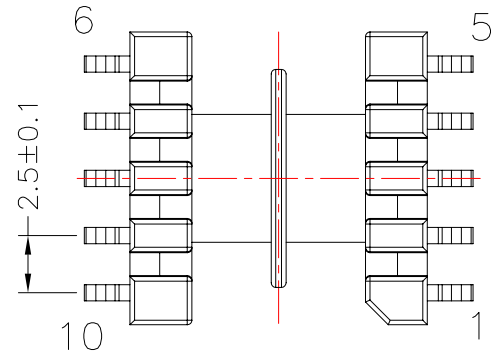

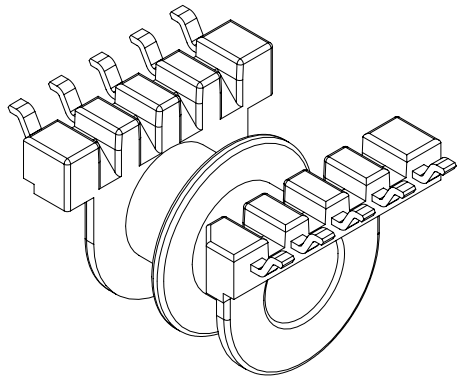

2 Notes:Pull Strenght 1.0 kg (min)

DWG NO.	EP13-10P-GW-2.5-2G-1-2S				
PART NO.	MATERIAL (BOBBIN)	MATERIAL (TERMINAL)	TERMINAL (PLATING)	PIN ALLOCATION	NOTE
TBI-103-03272.103	PM-9630	P.B	Sn	ALL PIN A = 16.99±0.15	
TBI-103-03272.113	PM-9630	P.B	Sn	NO PIN # 3 A = 16.99±0.15	
TBI-103-03272.123	PM-9630	P.B	Sn	ALL PIN A = 18.8±0.15	
TBI-103-03272.133	PM-9630	P.B	Sn	NO PIN #2,3,4,7,8,9 A =16.99±0.15	
	TOLERANCE: .X±0.15 .XX±0.10 .XXX±0.05			UNIT : m / m	SCALE 3: 1

Finish:
1. Pb wire Immersion Sn on terminal : Thickness:Sn plating,100,5 μm (200 μ inches) min,Base nickel 0.625 μm (25 μ inches) min.
2. CP wire Immersion Sn on terminal : Thickness:Sn plating,100,5 μm (200 μ inches) min.
3. Coplanarity deviation: 0.10 mm (0.004 inches)max.

REV 2