TBI TRANSFORMER BOBBIN INDUSTRIAL CO.,LTD.
Tel : 86-769-88789999 Fax : 86-769-88789989
http:// tbi-tw.com e-mail : tb6688@ms46.hinet.net

REVISIONS				
REV	SYM	DRAFTER	CHECKER	DATE
1		F.LU	G.F.YANG	12/14/11
2				
3				

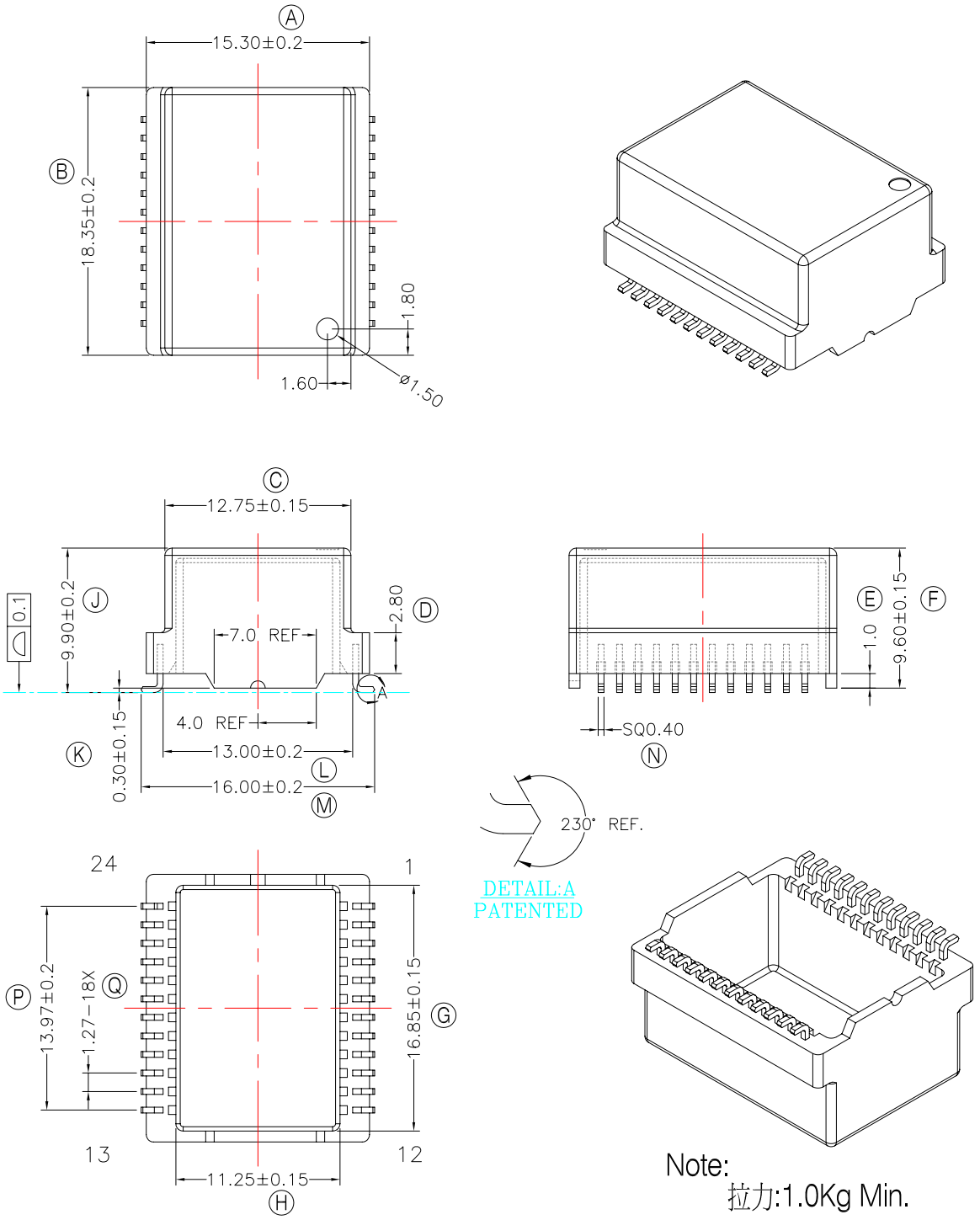

Note:
拉力:1.0Kg Min.

DWG NO.	H1815-24P-L-1.27-A0-11					
PART NO.	MATERIAL (BOBBIN)	MATERIAL (TERMINAL)	TERMINAL (PLATING)	PIN ALLOCATION	NOTE	
TBI-113-11101.1103	PM-9630	PB	Sn	ALL PIN		
						H.C
	TOLERANCE: 0<L<=4:±0.1 4<L<=16:±0.2 16<L<=63:±0.3			UNIT : m / m	SCALE 1 : 1	

Finish:
1. PB wire Immersion Sn on terminal :plating Thickness: 100% Sn ,5μm min; Base nickel 0.625μm min.
2. CP wire Immersion Sn on terminal : plating Thickness:100% Sn ,5μm min
3. Coplanarity deviation: 0.10 mm (0.004 inches)max.

REV 1