TBI TRANSFORMER BOBBIN INDUSTRIAL CO.,LTD.
Tel : 86-769-88789999 Fax : 86-769-88789989
http:// tbi-tw.com e-mail : tb6688@ms46.hinet.net

REVISIONS				
REV	SYM	DRAFTER	CHECKER	DATE
1		M.FANG	G.F.YANG	12/10/13
2				
3				

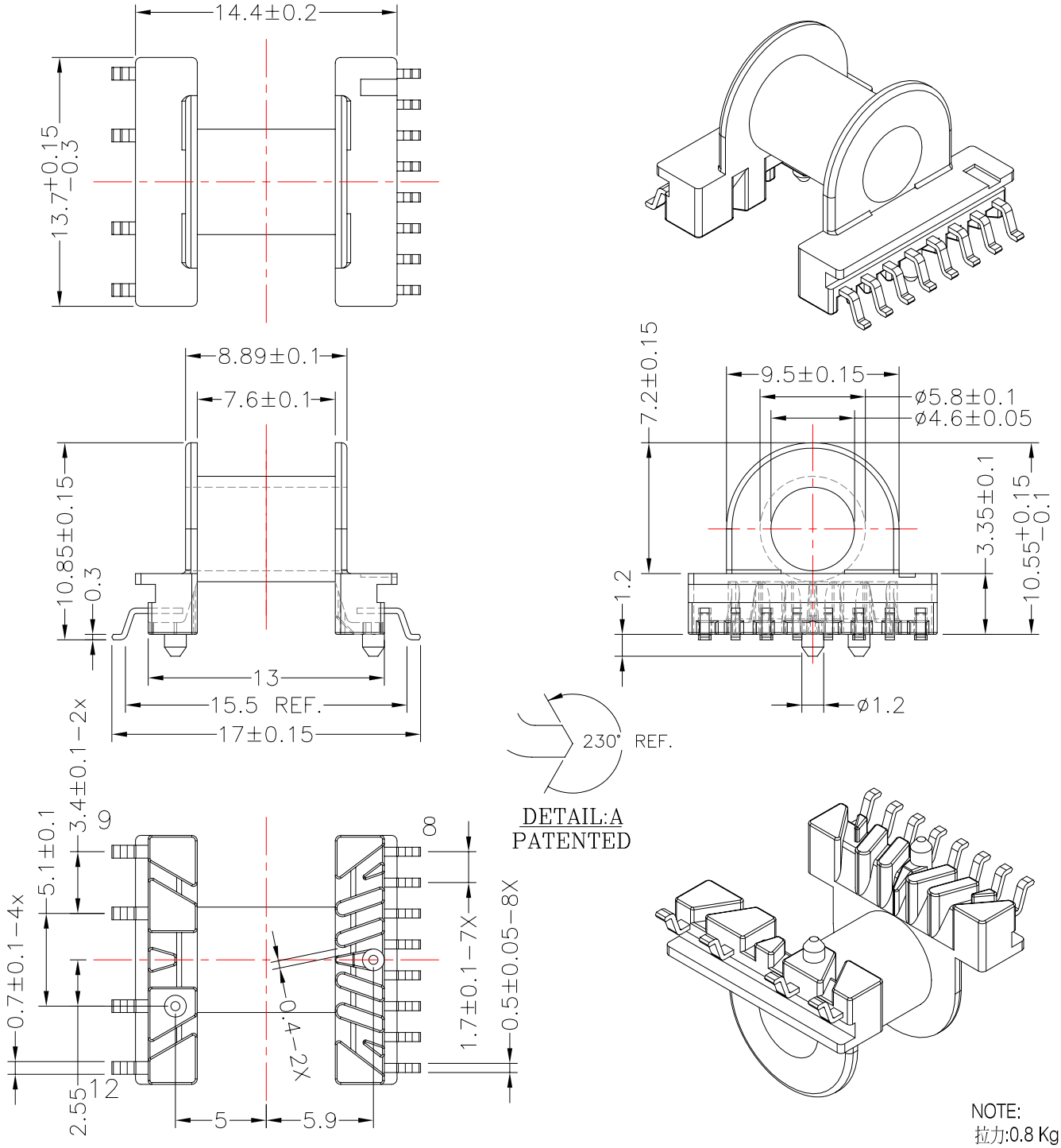

NOTE:
拉力:0.8 Kg MIN

DWG NO.	EP13-12P-GW-1.7-6F-11					
PART NO.	MATERIAL (BOBBIN)	MATERIAL (TERMINAL)	TERMINAL (PLATING)	PIN ALLOCATION	NOTE	
TBI-103-03661.1103	PM-9630	P.B	Sn	ALL PIN		H

TOLERANCE: .X±0.15 .XX±0.10 .XXX±0.05 UNIT : m / m SCALE 3 : 1

Finish:
1. Pb wire Immersion Sn on terminal : Thickness:Sn plating,100%,5μm (200μinches) min,Base nickel 0.625μm (25μ inches) min.
2. CP wire Immersion Sn on terminal : Thickness:Sn plating,100%,5μm (200μinches) min.
3. Coplanarity deviation: 0.10 mm (0.004 inches)max.

REV 1