TBI TRANSFORMER BOBBIN INDUSTRIAL CO.,LTD.
Tel : 86-769-88789999 Fax : 86-769-88789989
http:// tbi-tw.com e-mail : tb6688@ms46.hinet.net

REVISIONS				
REV	SYM	DRAFTER	CHECKER	DATE
1		X.H.GU	G.F.YANG	04/29/22
2				
3				

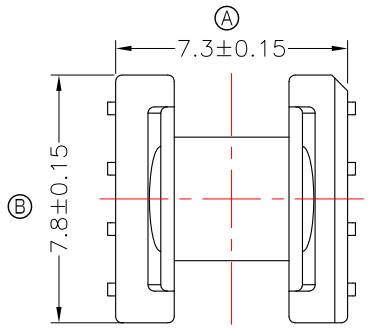

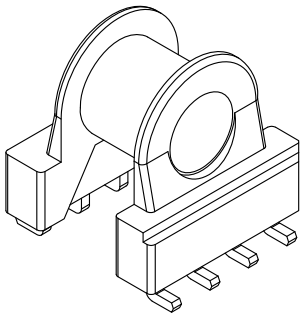

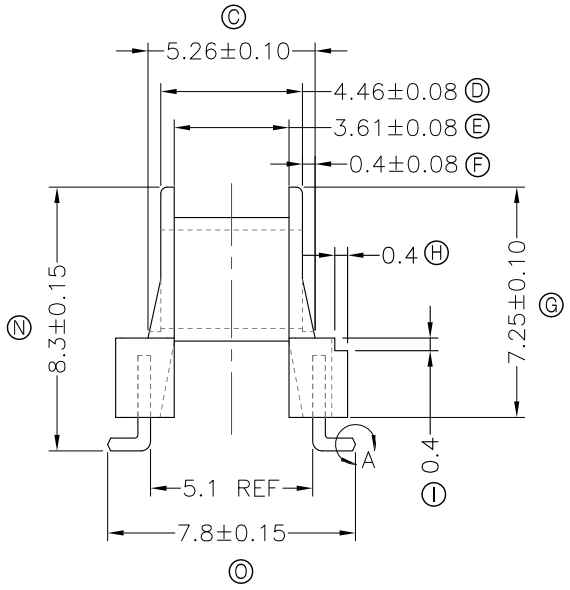

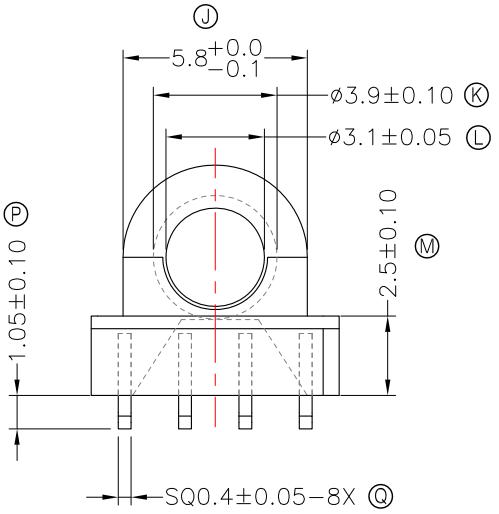

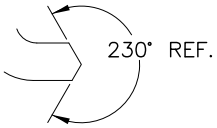

DETAIL:A
PATENTED

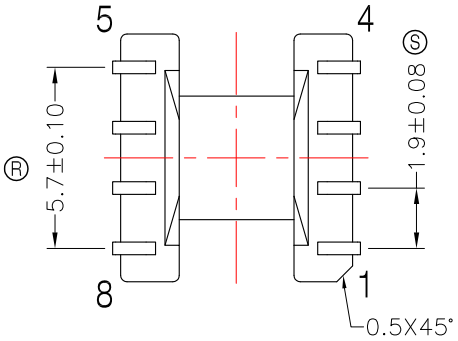

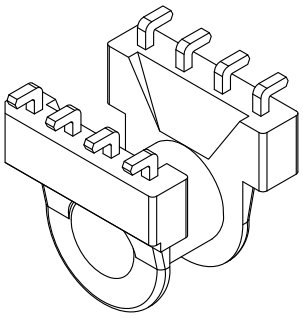

DWG NO.	EP5.5-8P-L-1.9-A8-11				
PART NO.	MATERIAL (BOBBIN)	MATERIAL (TERMINAL)	TERMINAL (PLATING)	PIN ALLOCATION	NOTE
TBI-103-01181.1103	PM-9630	PB	Sn	ALL PIN	
	TOLERANCE: .X±0.15 .XX±0.10 .XXX±0.05			UNIT : m / m	SCALE 5 : 1

Finish:
1. PB wire Immersion Sn on terminal : Thickness:Sn plating,100,5-12 μm (200-480 μ inches) min,Base nickel 1.25-2.5 μm (50-100 μ inches) min.
2. CP wire Immersion Sn on terminal : Thickness:Sn plating,100,5-12 μm (200-480 μ inches) min.
3. Coplanarity deviation: 0.10 mm (0.004 inches)max.

REV 1